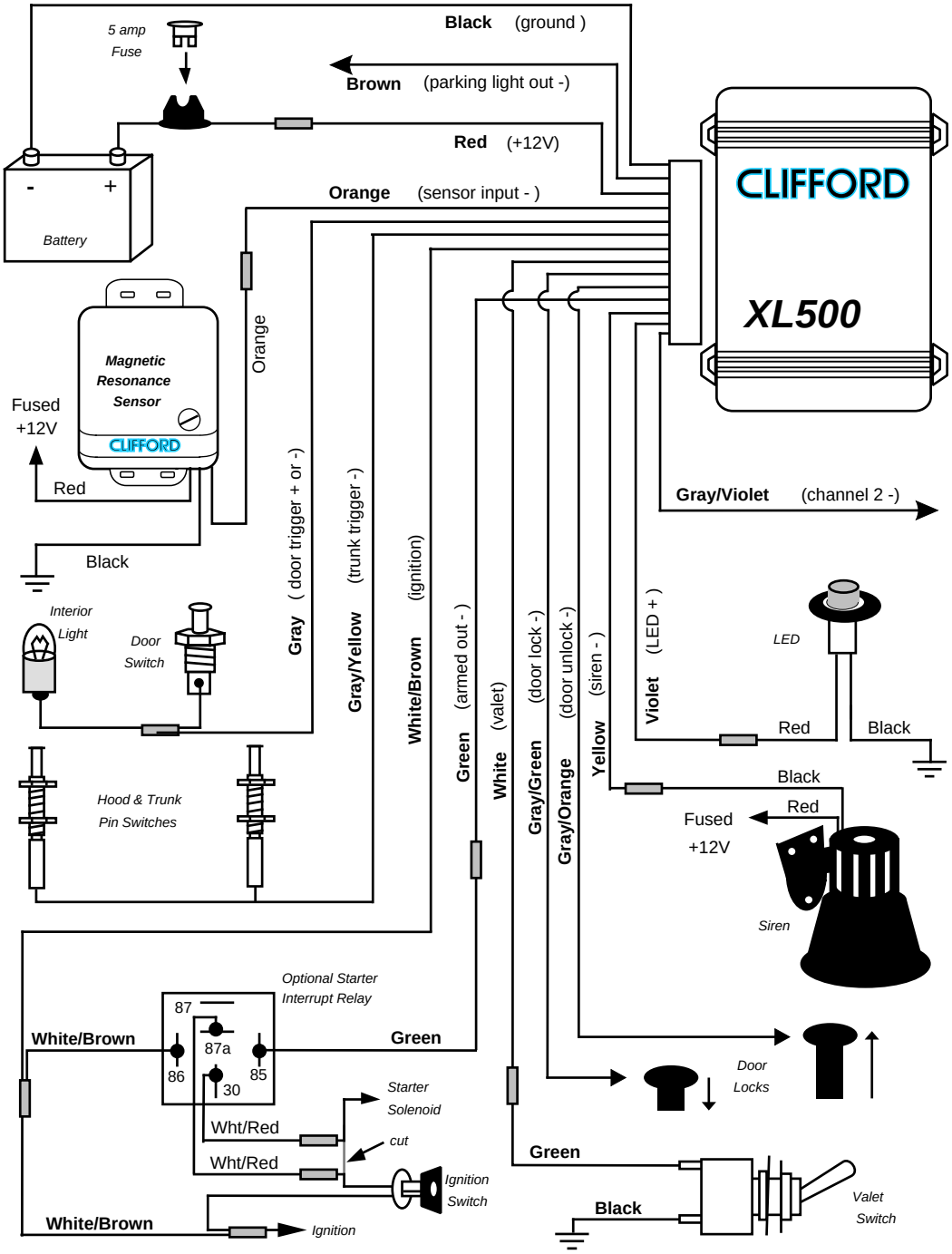
5 amp
Fuse
Black (ground)
Brown (parking light out -)
Red (+12V)
Orange (sensor input -)
Battery
CLIFFORD
XL500
Magnetic
Resonance
Sensor
CLIFFORD
Fused
+12V
Red
Black
Orange
Gray (door trigger + or -)
Gray/Yellow (trunk trigger -)
White/Brown (ignition)
Green (armed out -)
White (valet)
Gray/Green (door lock -)
Gray/Orange (door unlock -)
Yellow (siren -)
Violet (LED +)
Gray/Violet (channel 2 -)
Interior
Light
Door
Switch
Hood & Trunk
Pin Switches
LED
Red
Black
Black
Red
Fused
+12V
Siren
Optional Starter
Interrupt Relay
87
87a
86
85
30
White/Brown
Green
Door
Locks
Starter
Solenoid
Wht/Red
Wht/Red
cut
Ignition
Switch
Green
Black
Valet
Switch
White/Brown
Ignition

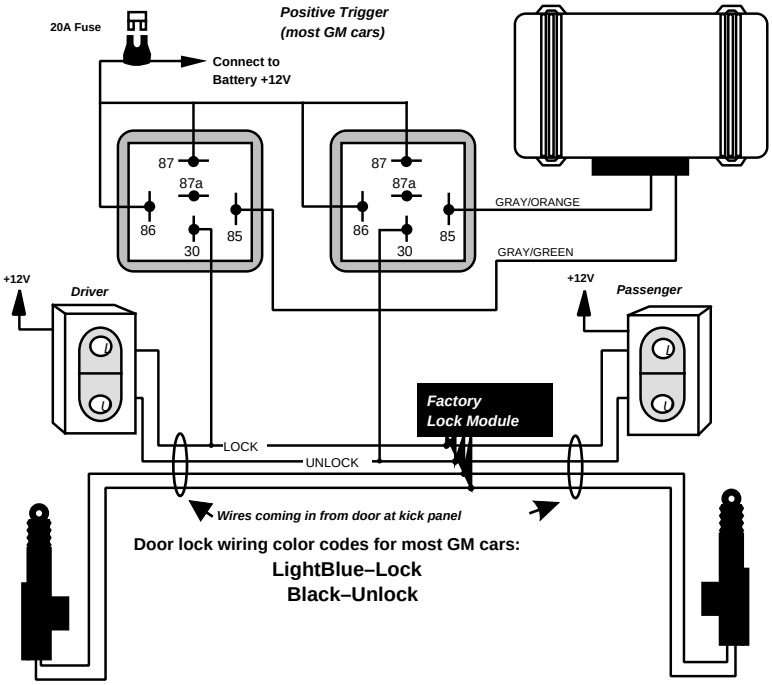
20A Fuse
Positive Trigger
(most GM cars)
Connect to
Battery +12V
87
87a
86
30
85
GRAY/ORANGE
GRAY/GREEN
+12V
Driver
Passenger
Factory
Lock Module
LOCK
UNLOCK
Wires coming in from door at kick panel
Door lock wiring color codes for most GM cars:
LightBlue–Lock
Black–Unlock

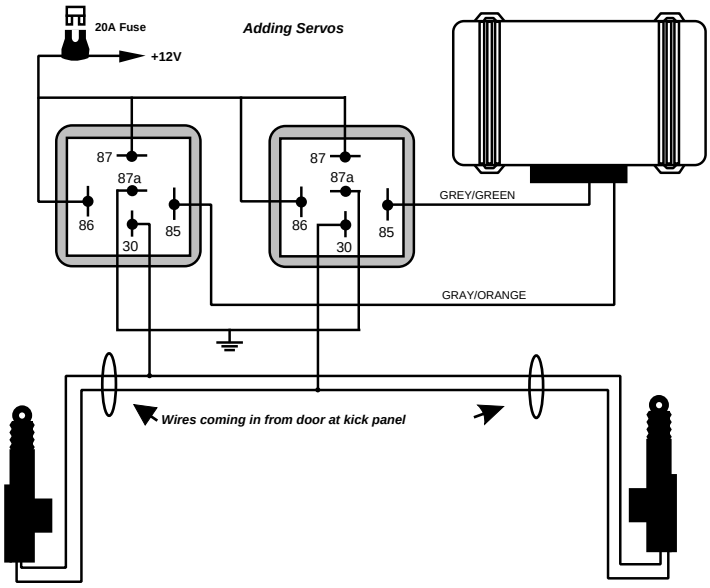
20A Fuse
+12V
Adding Servos
87
87a
86
30
85
GREY/GREEN
GRAY/ORANGE
Wires coming in from door at kick panel

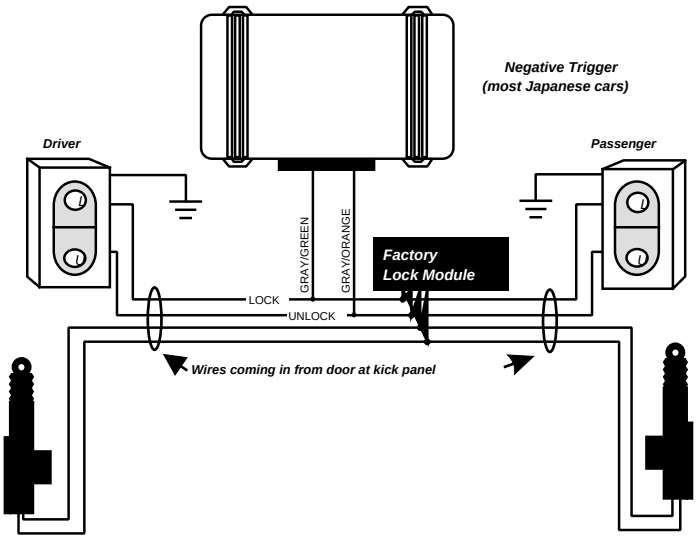
Negative Trigger
(most Japanese cars)
Driver
Passenger
GRAY/GREEN
GRAY/ORANGE
Factory
Lock Module
LOCK
UNLOCK
Wires coming in from door at kick panel

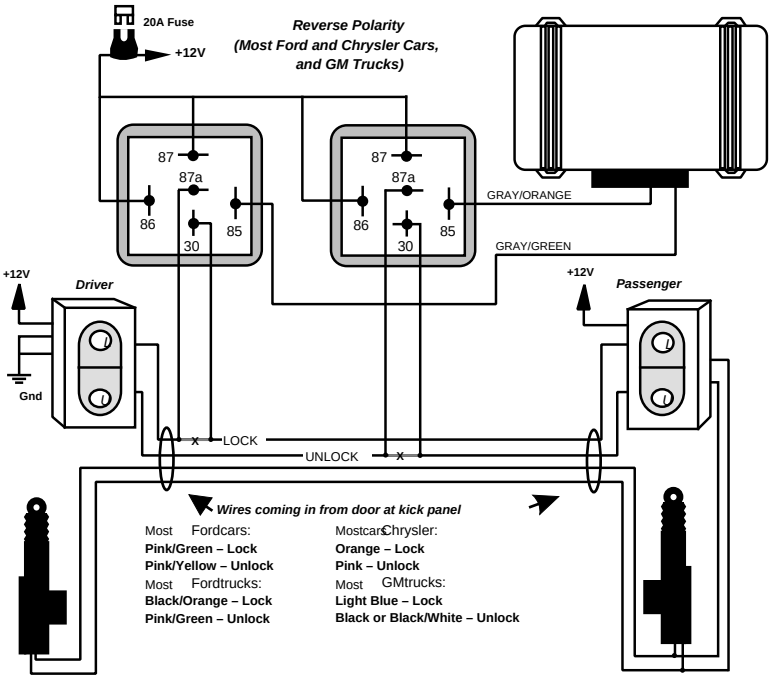
20A Fuse
+12V
Reverse Polarity
(Most Ford and Chrysler Cars,
and GM Trucks)
87
87a
86
30
85
GRAY/ORANGE
GRAY/GREEN
+12V
Driver
Gnd
Passenger
LOCK
UNLOCK
Wires coming in from door at kick panel
Most Fordcars:
Pink/Green – Lock
Pink/Yellow – Unlock
Most Fordtrucks:
Black/Orange – Lock
Pink/Green – Unlock
Mostcars Chrysler:
Orange – Lock
Pink – Unlock
Most GMtrucks:
Light Blue – Lock
Black or Black/White – Unlock